Countersunk Fixed Bolt For 8 - 15mm Thick Glass (Model: KSP.V2001-0815-1465)

- Fixed bolt with a countersunk head for use in spider glazing systems.
- Manufactured using 316 grade stainless steel.
- Standard 65mm long axis and suitable for 8 - 15mm thick glass.
- Please see the other bolts in the range for additional glass thicknesses.
- Special dimension glass bolts available on request.
- Glassparts recommend using thread locking compound whenever possible.

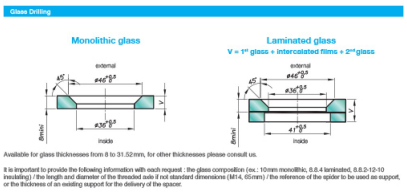

Attributes:

Product Code: KSP.V2001-0815-1465

Unit Of Sale: Each

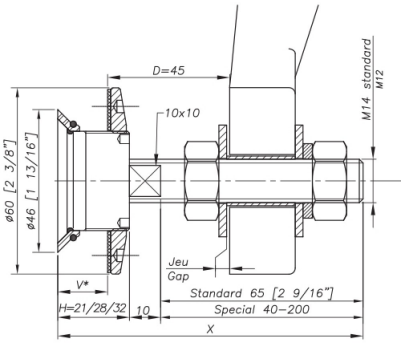

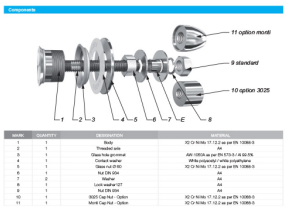

NUMBER	QUANTITY	DESIGNATION	MATERIAL
1	1	Body	X2 Cr Ni Mo 17.12.2 as per EN 10088-3
2	1	Threaded axis	A4
3	1	Glass hole grommet	AVI-1050A as per EN 573-3 / AI 99.5%
4	1	Contact washer	White polyamide / white polyetheres
5	1	Glass nut D 60	X2 Cr Ni Mo 17.12.2 as per EN 10088-3
6	1	Nut DIN 934	A4
7	2	Washer	A4
8	1	Countersunk screw CT	A4
9	1	Nut DIN 934	A4
10	1	SG35 Cap Nut - Option	X2 Cr Ni Mo 17.12.2 as per EN 10088-3
11	1	Monti Cap Nut - Option	X2 Cr Ni Mo 17.12.2 as per EN 10088-3

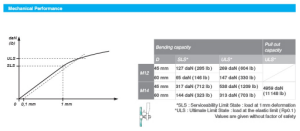

		Bending capacity		Pull out capacity
	Ø	SLS*	ULS*	ULS*
M12	46 mm	127 daN (285 lb)	399 daN (894 lb)	
	60 mm	66 daN (148 lb)	147 daN (330 lb)	
M14	46 mm	317 daN (712 lb)	538 daN (1208 lb)	4956 daN (11148 lb)
	60 mm	144 daN (323 lb)	313 daN (703 lb)	

*SLS : Serviceability Limit State : load at 1 mm deformation
*ULS : Ultimate Limit State : load at the elastic limit (Rp0.1)
Values are given without factor of safety